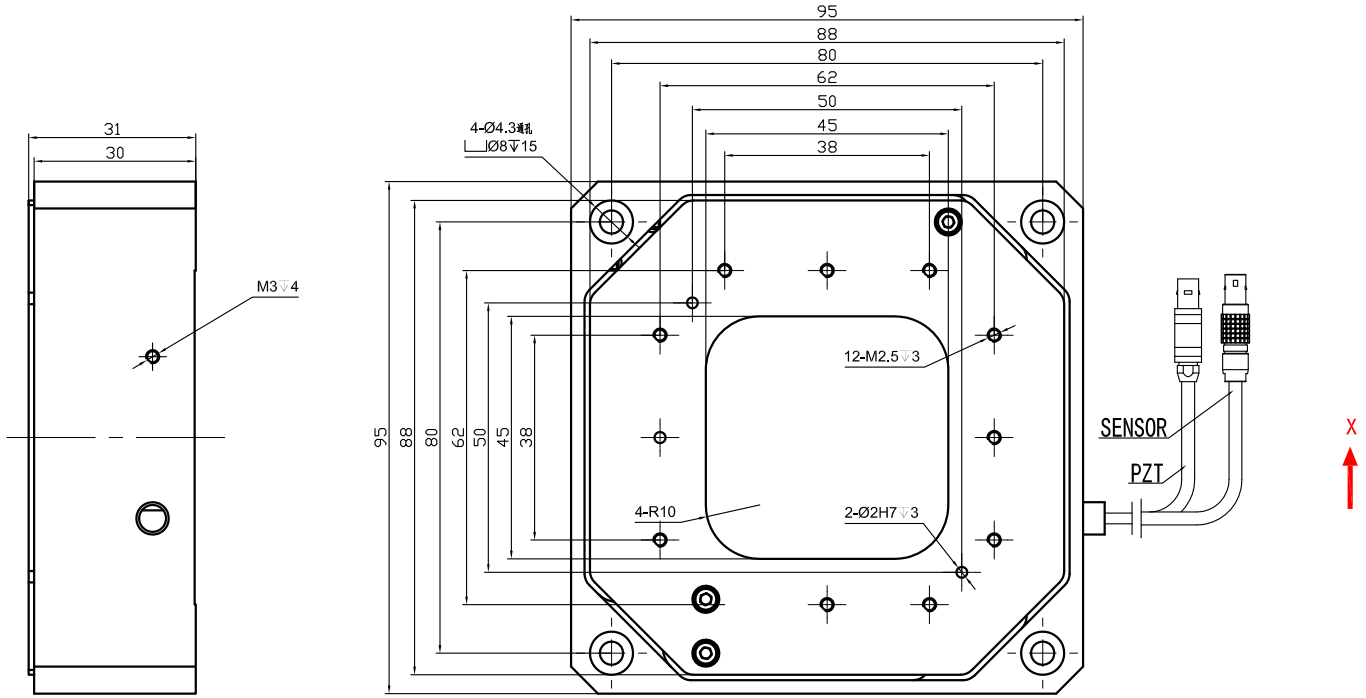
31
30
M3 ↧4
95
88
80
62
50
45
38
4-Ø4.3通孔
⌴Ø8↧15
12-M2.5↧3
4-R10
2-Ø2H7↧3
SENSOR
PZT
X

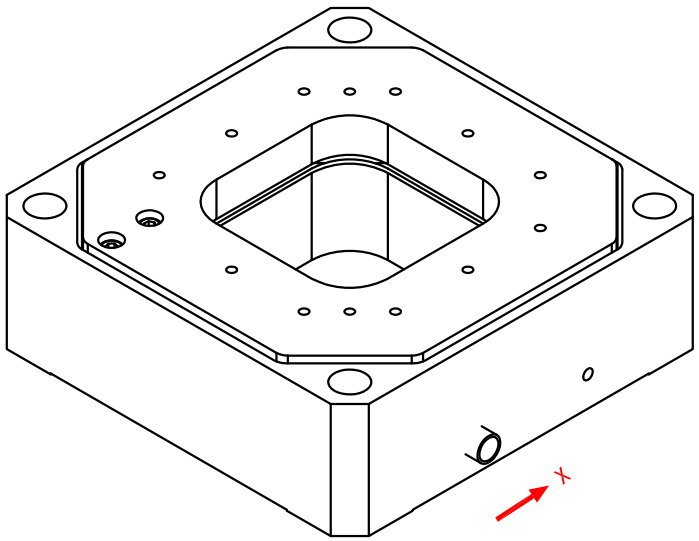
X